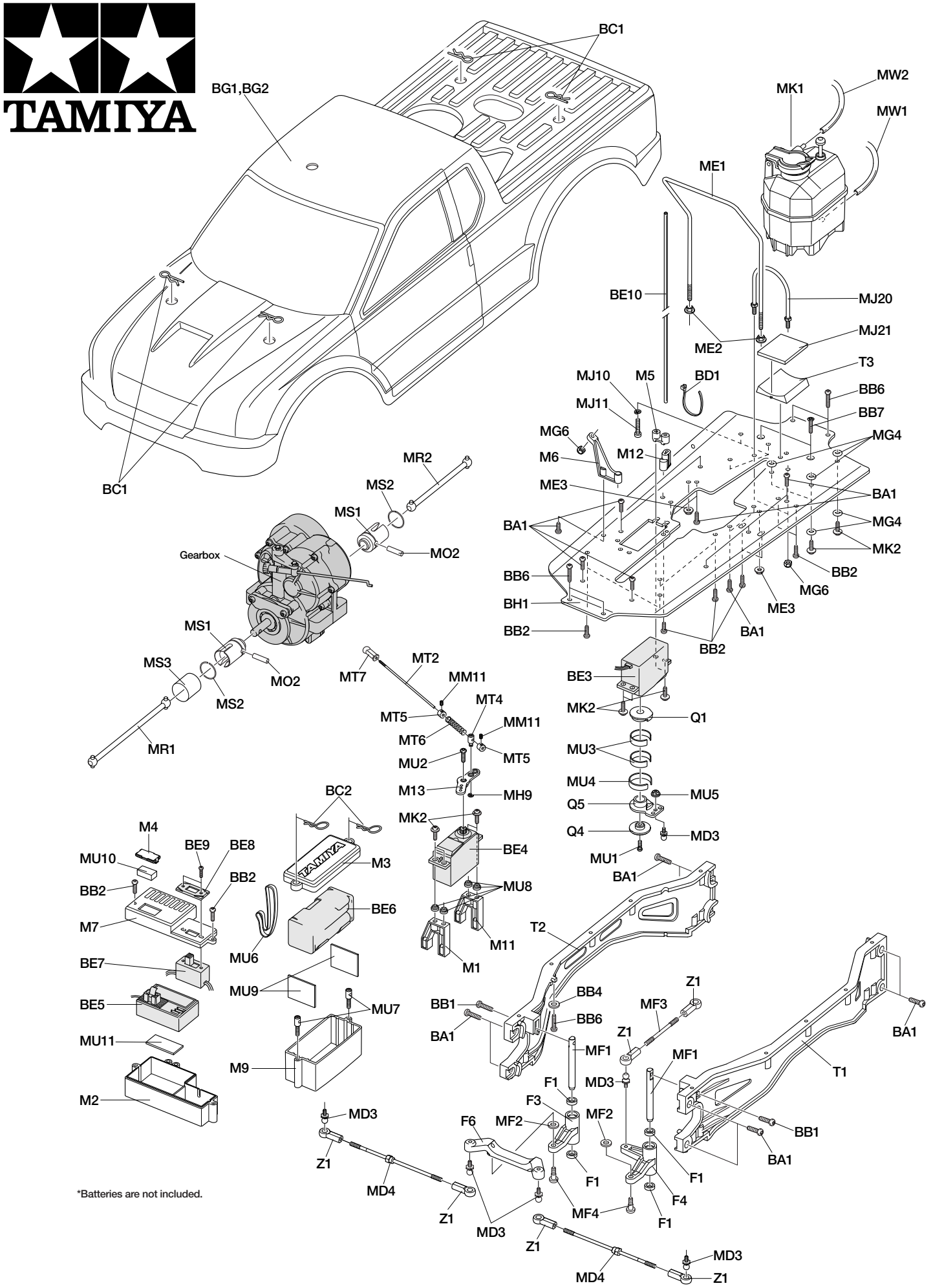

*Batteries are not included.